www.costeffectiveequipment.com

+1-573-466-4300

Operations Manual

Apogee® Flange Spin Developer

Models: A-F-SD2-1

A-F-SD2-2

A-X-SD2-2

A-FP-SD2-1

A-FP-SD2-2

Cost Effective Equipment

1. INTRODUCTION 4

1.1. Confidentiality Statement 4
1.2. Warranty 4
1.3. Returned Materials 4
1.4. Model and Revisions 4
1.5. Environmental Considerations 5
1.6. General Safety Hazards / Precautions 5
1.7. Electrical 5
1.8. Mechanical 5
1.9. Chemical 6
1.10. Lockout/Tagout Procedures and Information 6
1.11. Intended Use of Machine 7

2. EQUIPMENT DESCRIPTION 8

2.1. User Controls 8
2.2. Dimensions 9
2.3. Features and Programmability 10
2.4. Precision 10
2.5. Reliability 10
2.6. NRTL 11
2.7. Bowl Design 11
2.8. Utilities 11

3. INSTALLATION 12

3.1. Mounting the Flange Process Module 12
3.2. Mounting the Flange Controller 13
3.3. Facilities Requirements 14
3.4. Environment 14
3.5. Unpackaging & Inspection 15
3.6. System Installation & Setup 15
3.7. Start Up 15
3.8. System Checks 16

4. DATASTREAM™ TECHNOLOGY 17

4.1. System Parameters 17
4.2. Manual Controls – Apogee® Flange Spin Developer 17
4.3. Running Recipes 21
4.4. Editing Recipes 23
4.5. Editing Dispense Selection 23
4.6. Tool Specific Settings - Apogee® Flange Spin Developer 23

5. APOGEE® FLANGE SPIN DEVELOPER USE & OPERATION 25

5.1. Spin Chuck Installation and/or Removal 25
5.2. Starting Recipe 25

6. DEVELOPER CONFIGURATIONS 26

6.1. Puddle/Stream Dispense 26
6.2. Side Spray Dispense 26
6.3. Direct Spray Dispense 26

7. PREVENTATIVE MAINTENANCE 27

7.1. Service and Repairs 27

7.2. Fault Condition 27
7.3. Safety Checks 27
7.4. Mechanical/Utilities Checklist 27
7.5. Cleaning 28

8. TABLE OF REVISIONS 29

1. Introduction

1.1. Confidentiality Statement

Information supplied is for the use in the operation and/or maintenance of Cee® equipment. Neither this document nor the information it contains shall be disclosed to others for manufacturing or any other purpose without written authorization from, Cost Effective Equipment, LLC.

1.2. Warranty

Cost Effective Equipment, LLC warrants to the original purchaser (Buyer) that equipment is free from defects in material and workmanship under normal use and service in accordance with Cee® instructions and specifications. Buyer shall promptly notify Cee® of any claim against this warranty, and any item to be returned to Cee® shall be sent with transportation charges prepaid by Buyer, clearly marked with a Return Authorization (RMA) number obtained from Cee® Customer Support. Cee's obligation under this warranty is limited to the repair or replacement, at Cee® option, of any equipment, component or part which is determined by Cee® to be defective in material or workmanship. This obligation shall expire one (1) year after the initial shipment of the equipment from Cee®. This warranty shall be void if:

- Any failure is due to the misuse, neglect, improper installation of, or accident to the equipment.
- Any major repairs or alterations are made to equipment by anyone other than a duly authorized representative of Cee®. Representatives of Buyer will be authorized to make repairs to the equipment without voiding warranty, on completion of the Cee® training program.
- Replacement parts are used other than those made or recommended by Cee®.

CEE® MAKES NO OTHER WARRANTIES, EXPRESSED OR IMPLIED, WITH RESPECT TO EQUIPMENT. NO WARRANTY IS MADE AS TO THE MERCHANTABILITY OF THE EQUIPMENT NOR ITS FITNESS FOR ANY PARTICULAR PURPOSE. In no event shall Cee® be liable for consequential loss or damages, however caused. No person or representative of Cee® is authorized to assume for Cee® any liability in connection with equipment nor to make any change to this warranty unless such change or modification is put in writing and approved by an authorized representative of Cee® in writing.

This warranty shall be governed by the laws of the state of Missouri, U.S.A.

1.3. Returned Materials

Any materials, parts, or equipment returned to Cost Effective Equipment, LLC must be clearly labeled with a Return Material Authorization (RMA) number.

To obtain an RMA number, contact:

Cee® Customer Support
Telephone .....+1-573-466-4300
Email .....support@costeffectiveequipment.com
Web Address.....www.costeffectiveequipment.com
Physical Address.....6 Industrial Drive; St. James, Missouri 65559

1.4. Model and Revisions

The model and serial number information for the Cee® Apogee® Flange Spin Developer are located on the rear panel. Software version information can be found on the *About* screen. See *DataStream™ Manual* for screen shots and a detailed explanation of the system software.

1.5. Environmental Considerations

Cee® fosters sustainability through innovation in the durability and reliability of our precision tools and equipment. Individual component modules are engineered for serviceability ensuring long lasting performance. Processes are designed to minimize use & consumption of chemical compounds ensuring accurate, replicable, industry-leading results every time.

Cee® diligently screens suppliers to ensure conflict-free sourcing of minerals and product components are constructed of recycled materials wherever possible.

Cee® tools and equipment operate without the use of ozone depleting substances (ODSs) including chlorofluorocarbons (CFCs), methyl chloroform, hydrochlorofluorocarbons (HCFCs), carbon tetrachloride, perfluoro compounds (PFCs), or other volatile compounds/organic solvents.

1.6. General Safety Hazards / Precautions

Read this manual in its entirely before operating or servicing the machine

The unit is very heavy and proper precautions should be taken to when handling the machine to minimize the risk of injury. Labels are placed on the machine to identify areas where caution is needed during operation.

Sound pressure measurements greater than 80dB(A) are considered hazardous. The following sound pressure measurements were obtained from the Cee® Apogee® Flange Spin Developer at a distance of 3 ft (0.9 m) from the system:

Stand-by Mode.....54dB(A)

Normal Operations.....70dB(A)

1.7. Electrical

High voltage is present in the machine. Disconnect power before servicing.

Stored electrical energy is present in the machine. Before servicing allow sufficient time for discharge. The servo amp contains a charge light. Do not service the machine until this light has been extinguished.

This unit must be connected to an outlet with proper grounding.

1.8. Mechanical

This machine may contain compressed gases which can provide motive force for components and can expand violently upon decompression. Disconnect N_2 or CDA before removing any panels.

Developers are capable of very high-speed rotation. Ensure all lids and panels are in place before rotating these devices.

This device is equipped with a safety lid interlock safety feature which will immediately decelerate the spindle motor if the lid is opened at speeds greater than 60rpm.

Ensure that all panels are on and in their correct locations before powering up or operating.

When opening lids be aware of the pinch point at the hinge cover. Open lids only by using the handles on the lids.

1.9. Chemical

Cee® does not supply or dictate chemicals to be used in conjunction with the Cee® Apogee® Flange Spin Developer. Enclosure material data will be reviewed during equipment design and configuration to ensure compatibility with the customer's proprietary process.

Prior to introducing new chemicals, refer to your chemical supplier's factory specifications and MSDS. Material Safety Data Sheets (MSDS) contain crucial information regarding chemical safety, including details about hazardous components, physical properties, spill and leak procedures, waste disposal guidelines, and personal protective equipment requirements for handling.

Ensure chemical compatibility of all chemicals and materials being used inside the machine. This includes all wetted parts of the storage, supply, dispense, and waste systems.

All dispensed materials are held in one common waste storage tank. Ensure chemical compatibility and verify potential for negative interactions between chemicals before use.

Flammable Chemicals. No open flames/sparks.

Avoid the use of materials with an auto-ignite point ≤30°C.

Relieve pressure before opening canisters, tanks, cartridges, or syringes to refill.

Relieve pressure and shut off chemical valves before servicing supply lines, dispense valves or other components such as EBR/BSR tubes, dispense nozzles, spray tips, or developer lid.

Flush tubing and valves with an appropriate solvent and drain system before servicing.

When draining waste tank, use appropriate containers and connection methods.

Ensure proper ventilation/exhaust is always used.

Always wear appropriate Personal Protective Equipment. This includes safety glasses, gloves, and other equipment, as needed, to protect from mechanical and chemical hazards.

Exhaust and fume management is important to prevent the release of hazardous materials and ensure a safe working environment. Users should assume that all fumes are hazardous and take appropriate precautions to ensure system exhaust is functional per the guidelines outlined in section 7 of this operations manual.

1.10. Lockout/Tagout Procedures and Information

Before servicing, turn off the machine and remove the power inlet cord by disconnecting the plug where it enters the machine.

Note: There are no LOTO (Lock Out/Tag Out) facilities supplied with the Cee® Apogee® Flange Spin Developer. It is the responsibility of the customer/installer/end-user to ensure that the suitable LOTO

devices are provided on utilities being supplied to the Cee® Apogee® Flange Spin Developer in accordance with applicable laws, regulations, and/or company policies.

For more information, please contact *Cee® Customer Support*.

1.11. Intended Use of Machine

The Cee® Apogee® Flange Spin Developer is intended for use as a semiconductor/optical application machine.

The Cee® Apogee® Flange Spin Developer is not intended for use in food or medical applications or for use in hazardous locations.

The Cee® Apogee® Flange Spin Developer is intended for use only by trained personnel wearing the proper personal protective equipment. Anyone not trained in the proper use of the Cee® Apogee® Flange Spin Developer and having not fully read this manual, should not operate the equipment.

The Cee® Apogee® Flange Spin Developer is intended for use in a cleanroom environment to provide the proper processing conditions for the substrates. If it is used outside of a cleanroom environment, substrate cleanliness may be compromised.

The Cee® Apogee® Flange Spin Developer is not intended for use in a hazardous or explosive environment.

Normal Operating Conditions

The Cee® Apogee® Flange Spin Developer is designed for indoor use only.

Ambient Temperature .....10°C - 30°C

Relative Humidity .....≤80%

Altitude.....up to 3000 m

Pollution Degree.....2

Overvoltage Category II

Permissible Voltage Fluctuations.....100-120; 208-230VAC ±10%

If the Cee® Apogee® Flange Spin Developer is used in a manner not specified by Cee® or with accessories not provided by Cee®, the protection provided by the equipment may be impaired.

2. Equipment Description

The Cee® Apogee® Flange Spin Developer delivers track-quality performance, with revolutionary interface capabilities and the utmost in chemical compatibility, in an efficient and space-saving design. The heavy-duty-drive spin developer combines precision spin speed control and a high torque drive for rapid acceleration of 200mm and LCD squares up to 7”x7” (177.8mm x 177.8mm).

Fully programmable and user-friendly, this precision developer features the accuracy and repeatability needed to eliminate processing variability from critical experiments. With its convenient compact footprint, wide array of chemical compatibility, and durability, this easy-to-use system will provide years of high-performance operation, making the Cee® Apogee® Flange Spin Developer purchase a smart and cost-effective decision.

2.1. User Controls

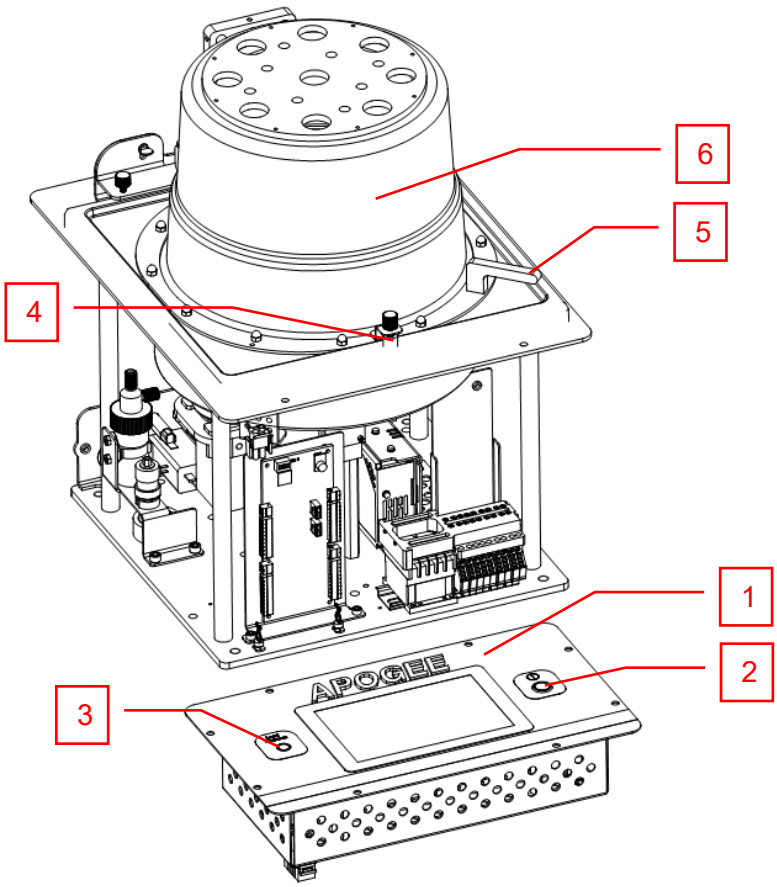

Figure 1: Cee® Apogee® Flange Spin Developer User Controls

1. flange controller.....GUI enables interaction with the process module
2. power button .....used to turn the tool off and on
3. local presence button[1].....used for remote access
4. lid interlock/latch.....ensures lid remains closed during process
5. lid handle.....used to safely open and close the lid
6. developer lid.....cover for the spin bowl

[1] Refer to the DataStream™ Manual for more detailed information.

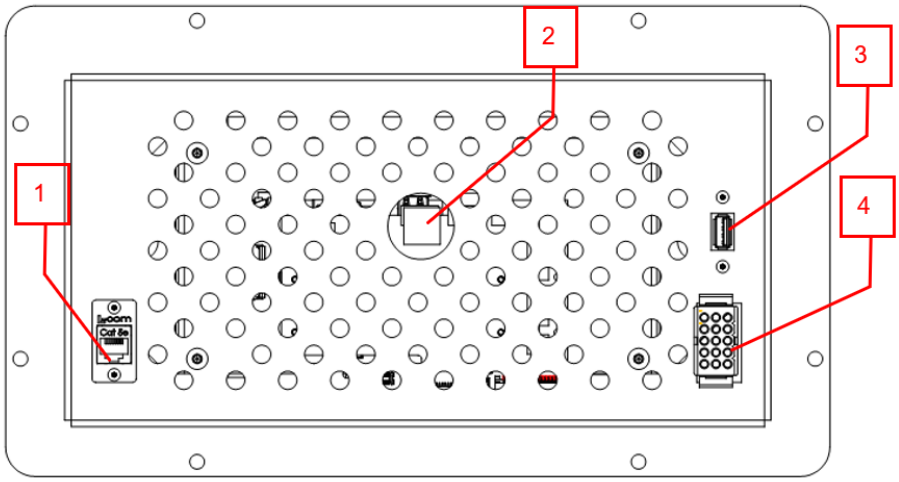

1. Ethernet.....facilitates remote recipe writing and remote device control
2. AMP Communication[2] .....enables communication to the servo controller
3. USB Port[3] .....facilitates data transfer
4. 15-pin connector .....supplies power & I/O to the GUI

2.2. Dimensions

- 14” (35.6cm) W x 17” (43.2cm) D[4] x 19” (34.3cm) H[5]
- machine weight 55lb (25kg)

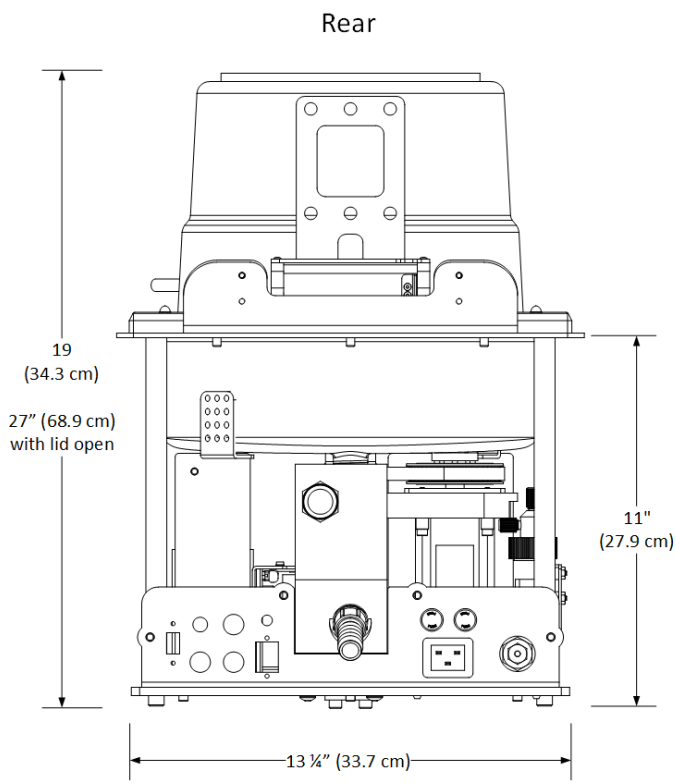

Figure 2: Rear View Apogee® Flange Spin Developer

[2] Note that this is the same connector type as Ethernet but the two are NOT interchangeable. To do so will cause damage to the machine.
[3] see DataStream™ Manual for more information
[4] D is with lid closed. Open D: 22 ½” (57.2cm)
[5] H is with lid closed. Open H: 36” (91.4cm)

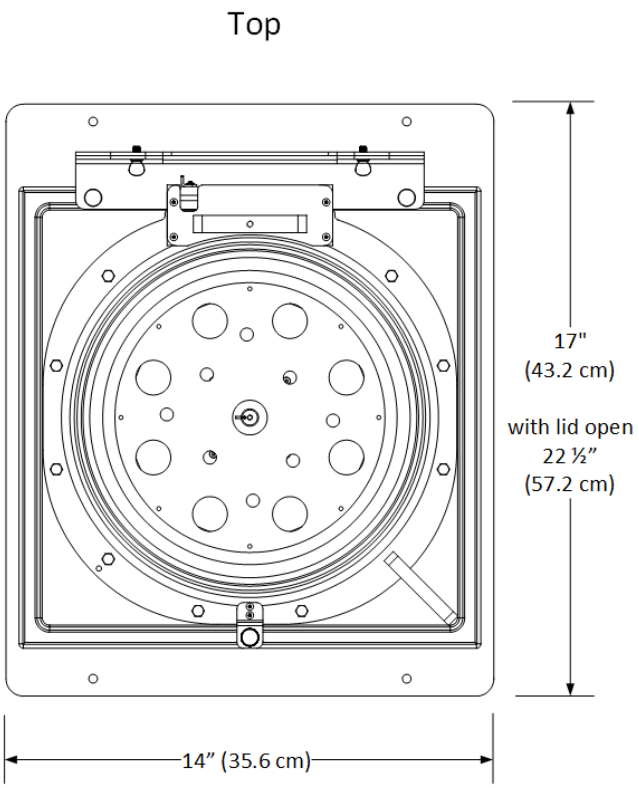

Figure 3: Side View Apogee® Flange Spin Developer

2.3. Features and Programmability

- vacuum and lid interlock
- full-color, alphanumeric-capable, touchscreen graphical user interface (GUI)
- supports unlimited user-defined program steps for each recipe
- 0.1 second step time resolution *(9,999.9 seconds maximum step time)*
- spin speeds up to 12,000rpm *(max rpm varies with substrate size)*
- spin speed acceleration
    - 0 to 30,000 rpm/s unloaded
    - 0 to 23,000 rpm/s with a typical 200mm substrate
    - 0 to 3,000 rpm/s with a 6" x 6" x 0.250" photomask in a recessed chuck
- bidirectional speed control/oscillating chuck
- up/download process parameters using DataStream™ technology via native USB/Ethernet ports
- multiple simultaneous automated dispense capability
- in-process dynamic speed & acceleration control

2.4. Precision

Spin Speed Repeatability..... 0.2rpm *(per standard developer module)*
Spin Speed Resolution ..... 0.2rpm *(per standard developer module)*
Substrate Sizes ..... 200mm round; 7" x 7" square *(max)*

2.5. Reliability

- indirect drive system protects the spin motor from contact with process chemicals and solvents
- industry-leading reliability and uptime
- low maintenance design
- one-year full warranty on parts and labor
- complimentary remote technical support for the life of the product
- application process assistance for life of the product

2.6. NRTL

Beginning in February of 2024, all standard Cee® Apogee® Flange Mounted Spin Developer models will proudly showcase the Intertek ETL mark, a testament to our commitment to safety and quality.

Intertek's ETL Mark signifies compliance with North American safety standards, providing assurance of product safety and quality. Recognized by Authorities Having Jurisdiction (AHJs) and code officials throughout the US and Canada, the ETL Mark is featured on millions of products sold nationwide. Customers can trust that products bearing the ETL Mark meet rigorous safety standards established by independent testing and ongoing inspections.

2.7. Bowl Design

- high-density polyethylene (HDPE) spin bowl for material compatibility
- optional polyethylene disposable liners available
- optional closed or open lid design for process flexibility and repeatability
- direct fan-jet spray, side angle puddle, and stream dispense options
- optional nitrogen blow-off nozzle
- integrated drain and exhaust ports
- optional automatic drain separator (aqueous/solvent)

2.8. Utilities

voltage ranges[6] ..... 100-120; 208-230VAC, single phase, 50/60Hz
power requirements 6A
drain port..... ¾” OD
exhaust port ..... 1” OD, 15-20cfm @ 0.2” water
vacuum ..... <33kPa abs
Nitrogen/CDA (automated dispense)..... 70 psi (482kPa)
DI water[7] ..... < 30psi (206.8kPa)

[6] 100-120VAC configuration is not available for Cee® Apogee® X-Pro II Workstation mounted process modules.
[7] for developer spray and backside rinse (if hard-plumbed)

3. Installation

3.1. Mounting the Flange Process Module

The Cee® Apogee® Flange Spin Developer is intended to be installed in a workstation, wet bench, or glove box. All components below the mounting flange should be inside a closed area and should not be exposed directly to chemicals or accessible to operators.

Clearance Requirements

Adherence to these requirements ensures adequate spacing, ventilation, and access to the detachable MAINs[8] supply cords as needed.

Equipment Rear[9]..... 6” (15.24cm)
Equipment Sides..... 3” (7.62cm)

Below are dimensions for the cut out and holes to be added into the working surface of the workstation, wet bench, or glovebox to properly lower and secure the flange mount unit. The equipment flange will accept #10 or M5 bolts for mounting.

Ensure the working surface can support the weight of the equipment. See Section 1 for details.

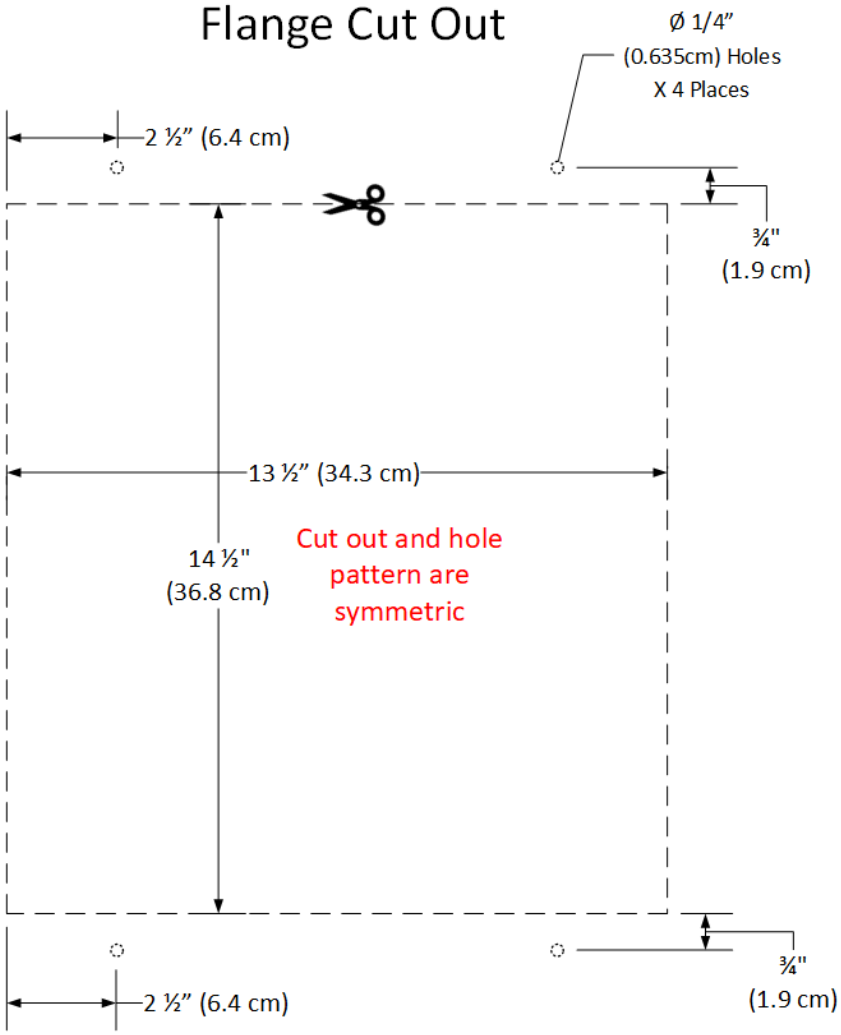

Figure 4: Apogee® Flange Mount Cut Sheet

[8] The tool should only be operated with the MAINs supply cord provided by Cee®.
[9] When equipped with optional Programmable Exhaust, rear clearance requirement is 12” (30.48cm).

3.2. Mounting the Flange Controller

The Cee® Apogee® Flange Controller is intended to be installed into the face of the workstation, wet bench, or glove box. The controller should not be exposed directly to chemicals and should be mounted in an ergonomic fashion.

Clearance Requirements

Adherence to these requirements ensures adequate spacing and ventilation.

Controller All Sides (Except Back) ..... 1" (2.54cm)
Controller Back ..... 2 ½ " (6.35cm)

Below are dimensions for the cut out to install the controller. The controller cable allows for it to be mounted up to 14 feet (4.26m) away. The controller flange will accept #10 or M5 bolts for mounting.

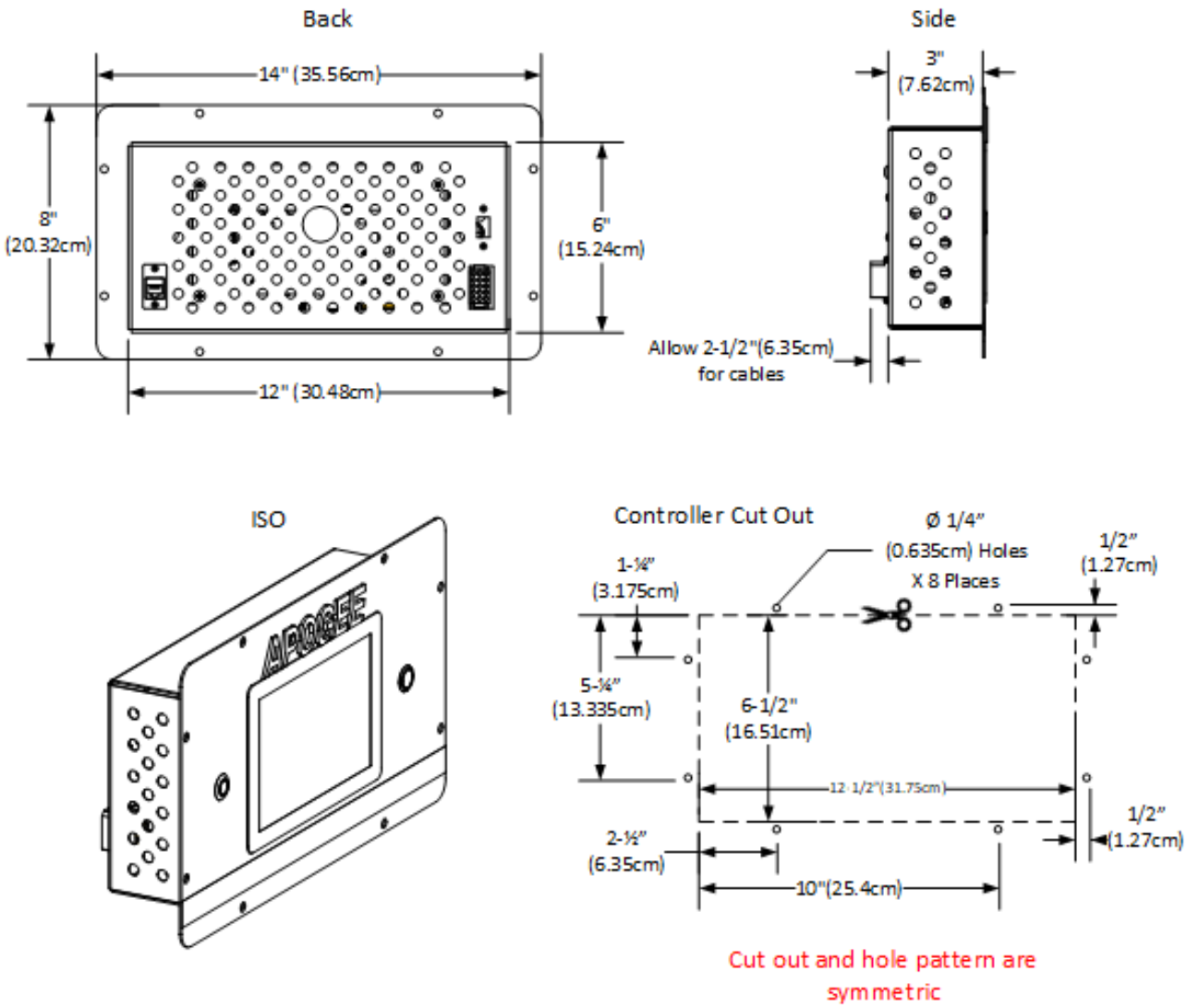

Figure 5: Cee® Apogee® Flange Controller Cut Sheet

3.3. Facilities Requirements

The Apogee® Flange Spin Developer requires the following utilities for operation.

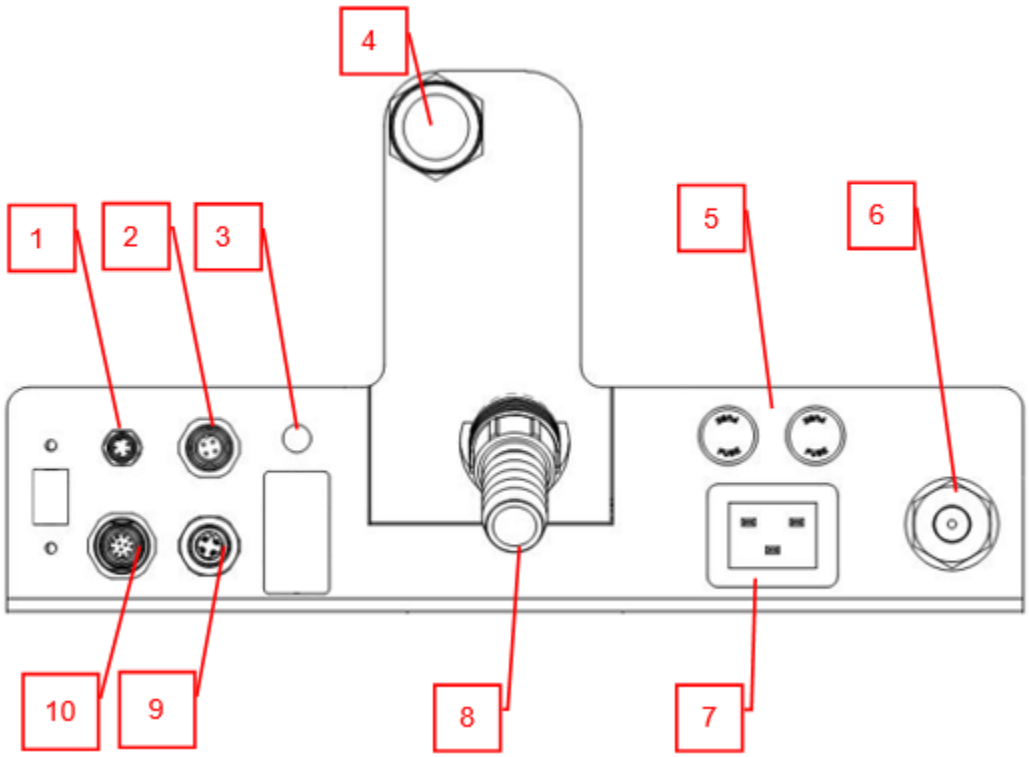

Figure 6: Cee® Apogee® Flange Spin Developer Facilities Connections

1. programmable exhaust ..... *(optional)* M8, 4pin female port, 24VDC
2. light tree ..... *(optional)* light tree port, M12 4pin, female, 24VDC
3. backside rinse (BSR) ..... *(optional)* dispense material fitting for backside rinse
4. spin bowl exhaust port ..... exhaust port for spin bowl vapors (20-50cfm @ 0.2" water)
5. fuses..... system protection fuses *(Replacement: BK/MDA-15-R)*
6. system vacuum ..... ¼" NPT port <33kPa abs
7. AC power in[10] ..... single phase 100-120VAC; 208-230VAC 6A
8. spin bowl drain ..... port via which liquid waste is removed from the tool
9. accessory port..... as needed, M12 4pin, male, 24VDC
10. dispense trigger..... *(optional)* connection for automated dispense control box

3.4. Environment

The Cee® Apogee® Flange Spin Developer should be operated in a clean, climate-controlled environment.

[10] 100-120VAC configuration is not available for Cee® Apogee® X-Pro II Workstation mounted process modules.

3.5. Unpackaging & Inspection

1. Lifting from the bottom of the unit, carefully remove from the packing crate. Do not lift by any of the top covers or protrusions. Do not roll or turn the unit on its sides.
2. Remove packing foam and plastic wrap.
3. Thoroughly check machine for shipping damage. If physical damage is seen, **DO NOT APPLY POWER!** Contact *Cee® Customer Support* immediately.

The following items are included with shipment:

- Cee® Apogee® Flange Spin Developer
- flange controller
- temperature & humidity sensor
- power cord
- 15 ft controller cord
- operators manual (USB)

Optionally included items:

- dispense systems/related components
- spin chucks with screws
- programmable exhaust
- substrate centering equipment
- waste systems

3.6. System Installation & Setup

*Please refer to the quick reference card supplied with the tool.

1. Mount the equipment into the workstation, wet bench, or glove box as described in Section 3.
2. Thoroughly clean the spin bowl and spin chuck.
3. Connect utilities per the reference diagram in *Figure 6: Cee® Apogee® Flange Spin Developer Facilities Connections.*
4. Connect the temperature & humidity sensor to the CAN terminal.
5. Connect the vacuum supply to the vacuum fitting. (System vacuum <33kPa abs)
6. Connect the drain to the drain port.
7. Connect exhaust lines to the exhaust port. (System exhaust flow rate of 20-50cfm)
8. Connect the (optional) dispense box (if equipped) to the dispense triggers.
9. Connect the (optional) programmable exhaust (if equipped) to the programmable exhaust terminal.
10. Connect any dispense as indicated on the supplied USB dispense diagrams.
11. Connect the flange controller to the Apogee® Flange process module via the 15-pin cable and RJ45 connector. The RJ45 connector is labeled 'AMP' and should *only* be connected to the amp port in the center of the back of the main controller. ***Connecting this cable to the incorrect port may cause damage to the equipment.*** See Figure 7 for details.
12. Plug in the machine using the supplied Cee® shielded cables.

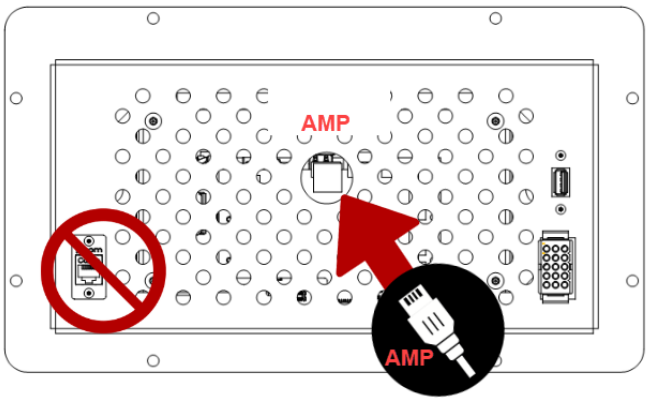

Figure 7: Rear Controller RJ45 Connection

3.7. Start Up

Turn the machine on by pressing the lighted power switch. The display will cycle through a series of boot screens before arriving at the main login screen.

Enter default administrative login credentials:

Username: ..... admin
Password: admin2

3.8. System Checks

On the ***Process*** screen, navigate to ***Tools>Manual Control*** and perform the following system checks for initial validation of the Cee® Apogee® Flange Spin Developer.

Vacuum:

Turn the vacuum on and verify that vacuum is pulling through the hole of the spin shaft. Turn the vacuum off and verify that vacuum ceased at the hole of the spin shaft.

Spin Speed:

Close the lid and set spin speed to 1000rpm. Verify that the shaft spins and that the tool reads 1000rpm.

Lid Interlock[11]:

Open the spin bowl lid to confirm lid interlock functionality. The tool will decelerate immediately.

Temperature & Humidity Sensor:

On the left side of the ***Process*** screen, confirm that temperature and humidity readings are present.

Automated Dispense (optional):

If equipped with automated dispenses, navigate to ***Tools>Manual Control>Dispenses***, tap ***Dispense 1*** to select, then hit ***Apply*** to validate that Dispense Triggers are operational. Repeat as needed for additional dispense triggers.

Programmable Exhaust (optional):

If equipped with programmable exhaust, ensure that it is working properly

Spin Chuck(s):

Aligning the spin chuck slot with the pin or key on the spin shaft, firmly press the chuck onto the shaft ensuring the pin or key is fully engaged. If equipped, insert chuck screw, and tighten.

Place substrate on the spin chuck.

Navigate to ***Tools>Manual Control>Vacuum*** and set vacuum threshold to 64kPa.

If the vacuum is less than 64kPa, the chuck passes inspection.

Turn off the vacuum and remove the substrate. Spin chuck removal is reverse of installation.

Once operations have been validated, the Cee® Apogee® Flange Spin Developer is ready for use. Begin by creating a recipe. See DataStream™ Manual for more information.

****In the event of a fault condition, power cycle the tool to restore function.***

***In the event that power to the machine is unintentionally interrupted and then restored, the spin coater will attempt to reboot, but the process will not resume automatically.**

[11] To ensure that the wafer centering routine can be performed with the lid open, the lid interlock feature is triggered at speeds above 60rpm.

4. DataStream™ Technology

This section covers information specific to Apogee® Flange Spin Developers and is intended as a companion to the DataStream™ Technology Software Manual. ***Please review the DataStream™ Operations Manual*** for detailed guidance on software usage.

4.1. System Parameters

Parameter	Actual	Set Point	Status
Spin Speed	0 rpm	0 rpm	In Range
Spin Acceleration	500 rpm/s	500 rpm/s	In Range
Active Dispenses	None	None	In Range
Dispense Source Empty	None		In Range
Chuck Vac	98.8 kPa	101.3 kPa	In Range
Waste Bottle Full	False		In Range
Ambient Temperature	27.9 °C		In Range
Humidity	44.4 %		In Range
Vibration	3		In Range

Spin Speed---------- measured rotational speed of the spin chuck in revolutions per minute (rpm)

Spin Acceleration[12]---------- dictates how fast the spin chuck will accelerate in revolutions per minute per second (rpm/s)

Percent Exhaust---------- displays the valve opening percentage of the optionally equipped programmable exhaust module

Active Dispenses---------- indicates which dispenses are enabled

Dispense Source Empty--- indicates when dispense sources are low or empty

Chuck Vac---------- measurement of the vacuum pressure holding the substrate against the spin chuck in kPa

Waste Bottle Full---------- indicates whether the sensors detect a full waste bottle

Ambient Temperature------ the air temperature of the environment where the equipment is housed

Humidity[13]---------- the ambient relative humidity in the environment where the equipment is housed

Vibration---------- unitless measurement of g-forces at the spindle block; can be used to detect off-center substrates at high speeds

4.2. Manual Controls – Apogee® Flange Spin Developer

The Manual Control activity is an advanced feature that allows users to run most operating processes outside of a recipe. This mode is useful for tasks such as prototyping processes, verifying equipment operation, and recovering from aborted processes. To access the activity, navigate to ***Tools > Manual***

[12] ***Spin Acceleration*** settings are dependent on the presence of a ***Spin Speed*** set point.
[13] Both Ambient Temperature and Humidity are measured via a custom sensor board mounted next to a ventilation inlet inside the tool. If sensor is disconnected, default of -1.1 is displayed.

Control. Actual and set point parameter values are displayed on the left. A drop-down menu of available controls is located on the right.

If using remote feature, the user must confirm local presence to execute manual commands. Refer to the DataStream™ Manual *for guidance on the Local Presence feature.*

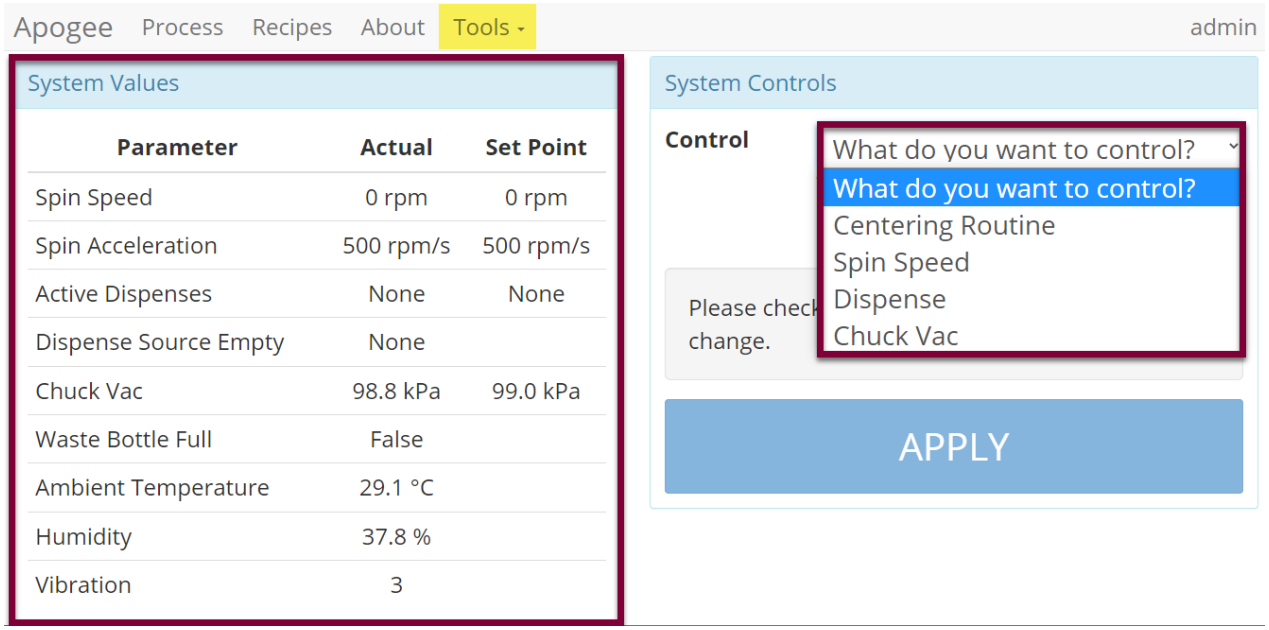

Centering Routine

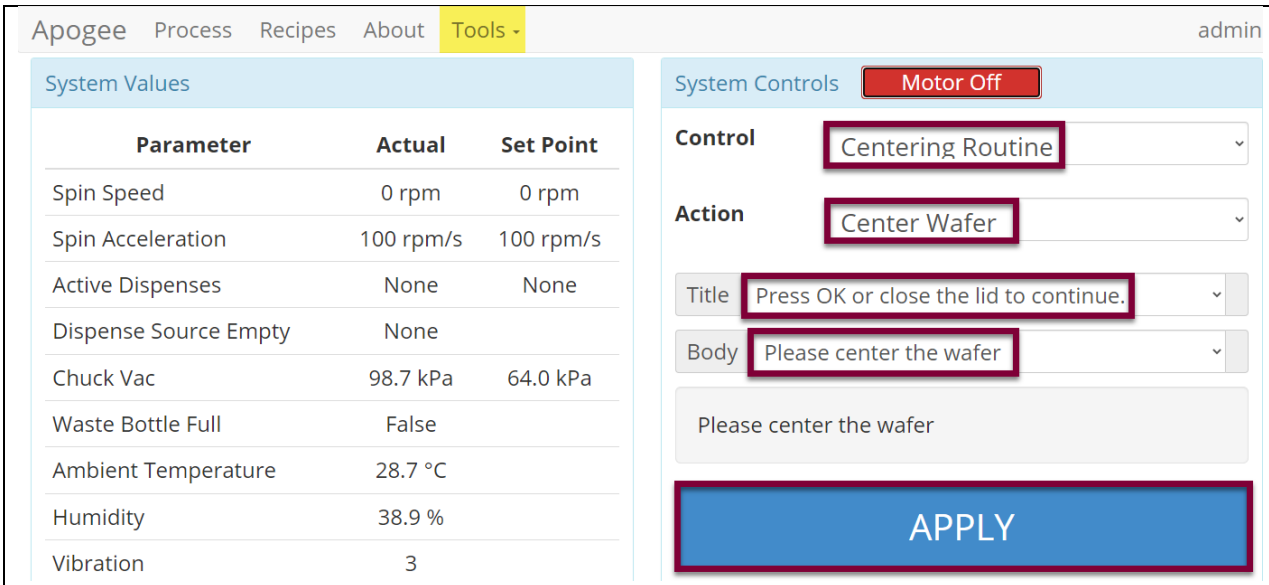

Select a Control of *Centering Routine* and the Action will default to *Center Wafer*.

Select an option from the Title dropdown menu.

Select an option from the Body dropdown menu.

Click APPLY

Allows users to assess and view configuration of the Centering Routine Display window outside of the Advanced Recipe Editor Activity.

Spin Speed:

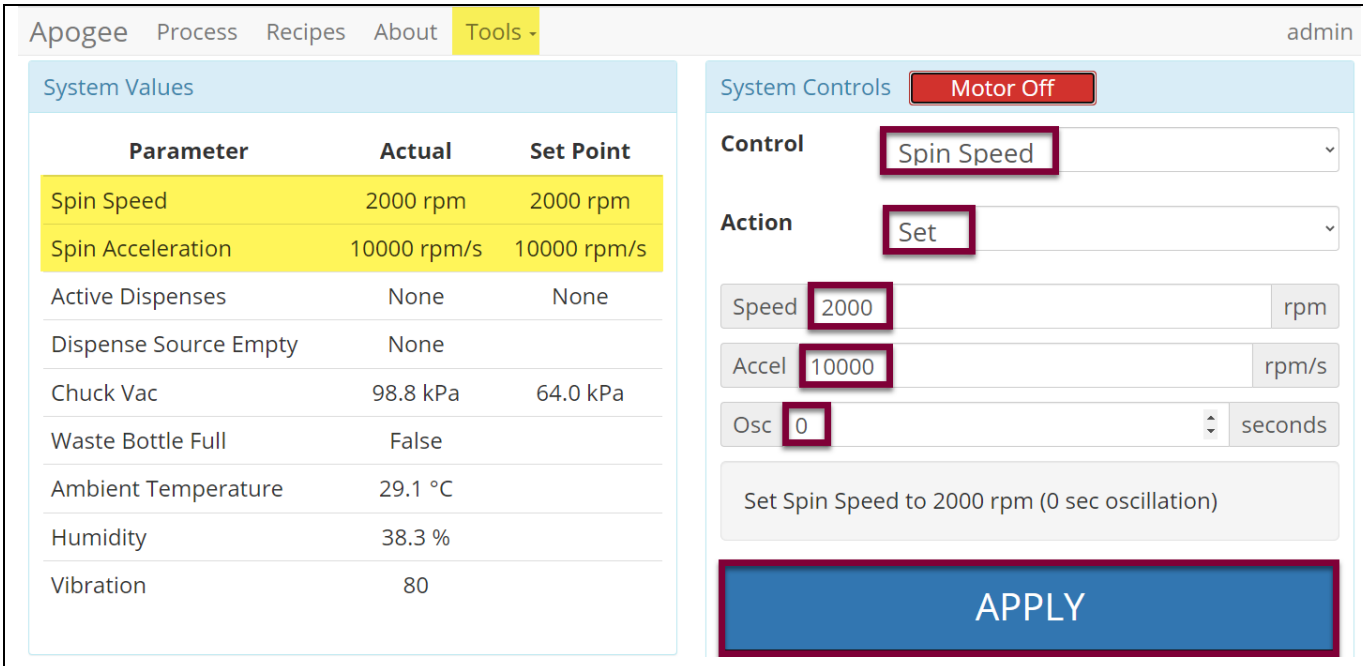

Select a Control of *Spin Speed*

*T*he Action will default to *Set*.

Close the developer lid and enter desired values for spin speed, acceleration, and oscillation within the supported range for each setting:

Speed	1-12,000 rpm (standard developer) 1-6,000 rpm (Flange Spin Developer)
Acceleration	1-30,000 rpm/s
Oscillation[14]	0-99 seconds

Click APPLY

Note that the actual and set point values have populated on the system values list.

[14] reverses spin direction for the period specified

Dispense *(*if equipped)*

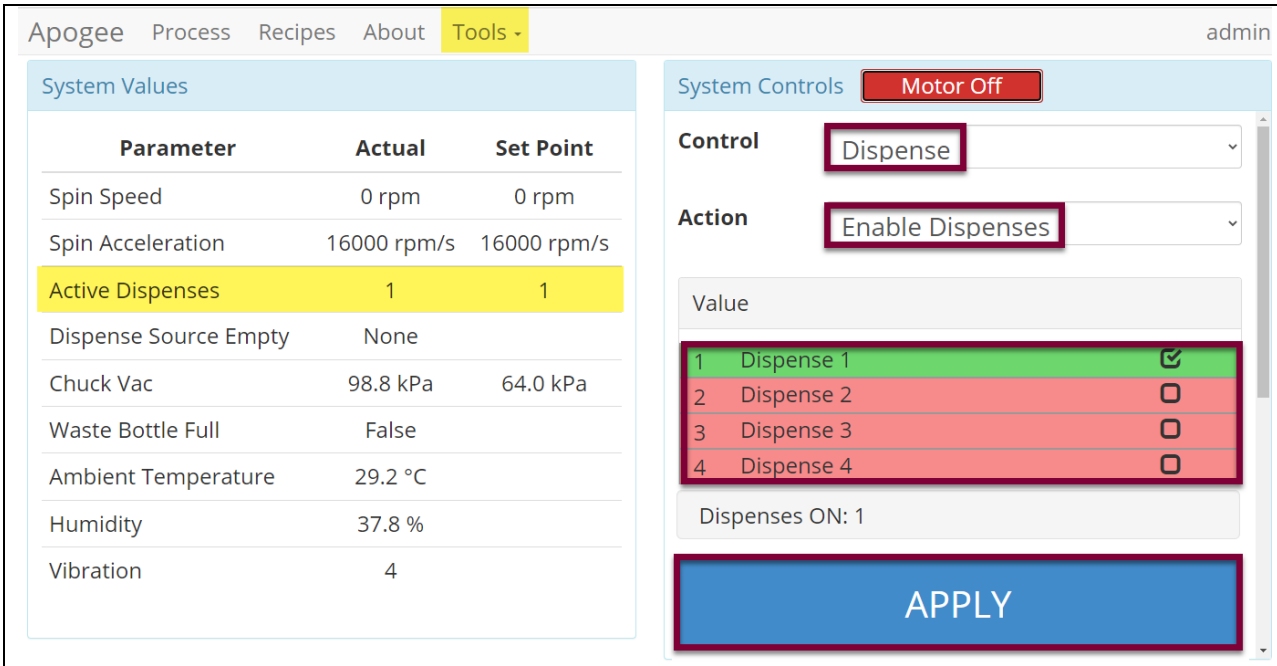

Select a Control of *Dispense*

The Action will default to *Enable Dispenses*.

Check the box for the desired dispenses - selections are rendered in green

Click APPLY

Note that the actual and set point values for enabled dispenses have populated on the system values list.

Chuck Vac **ensure source vacuum is on*

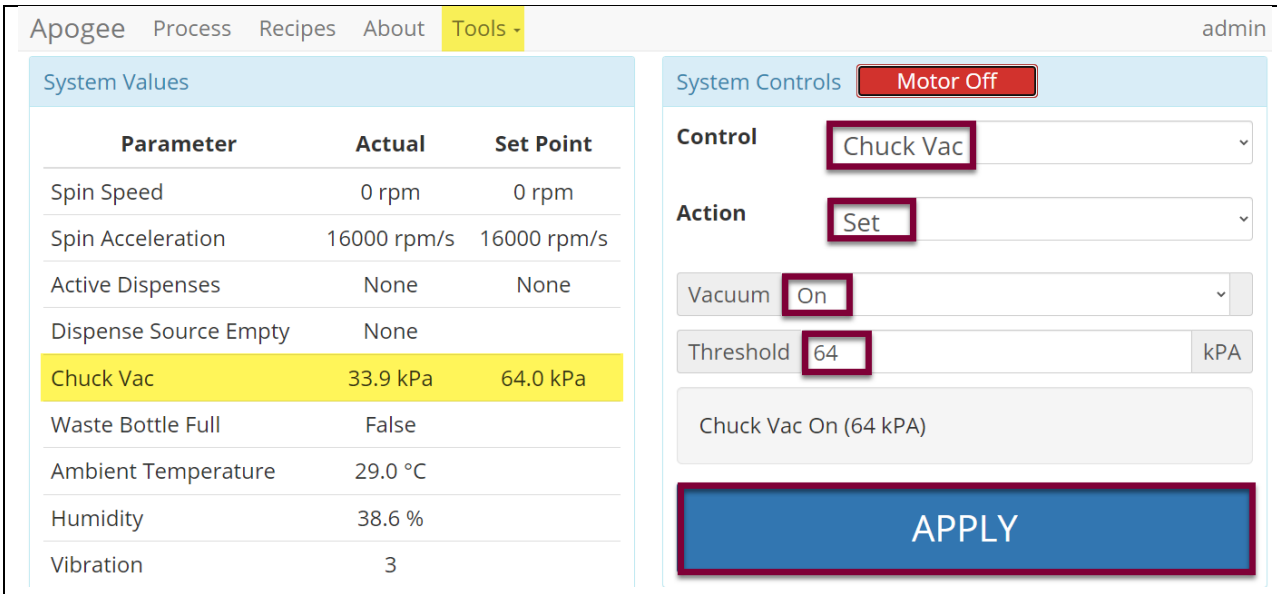

Select a Control of *Chuck Vac*

The Action will default to *Set*.

Set Vacuum to *On* or *Off.*

Set Threshold to the desired value in kPa.

Click APPLY

Note that the actual and set point values have populated on the system values list.

4.3. Running Recipes

1. Navigate to the *Recipes* page.

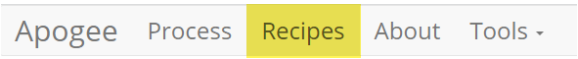

2. Click ***Load*** to access the recipes list.

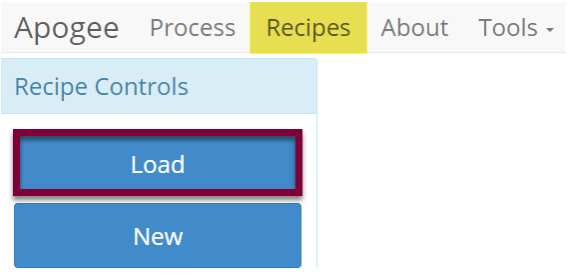

3. Search for, identify, & select the preferred recipe.

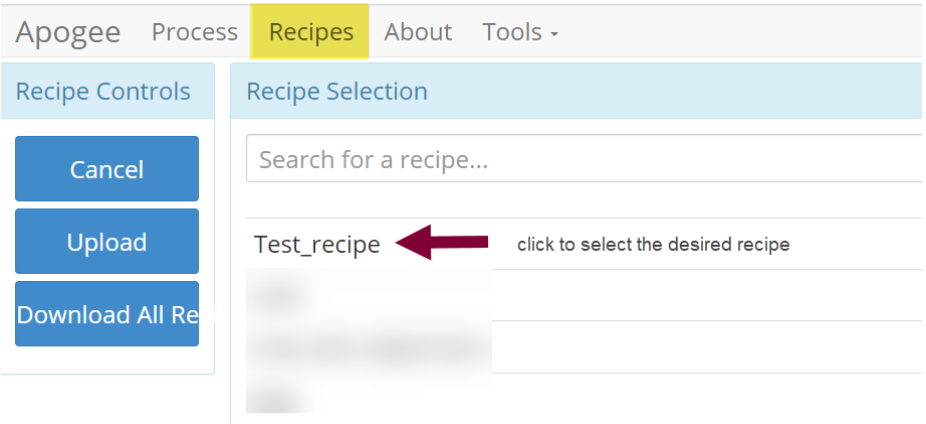

4. Click ***Run***.

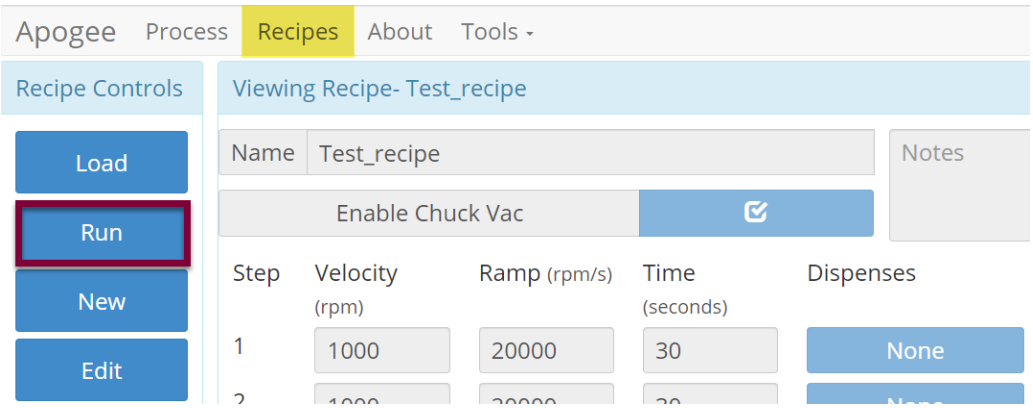

5. Click ***Start*** to initiate the recipe process.

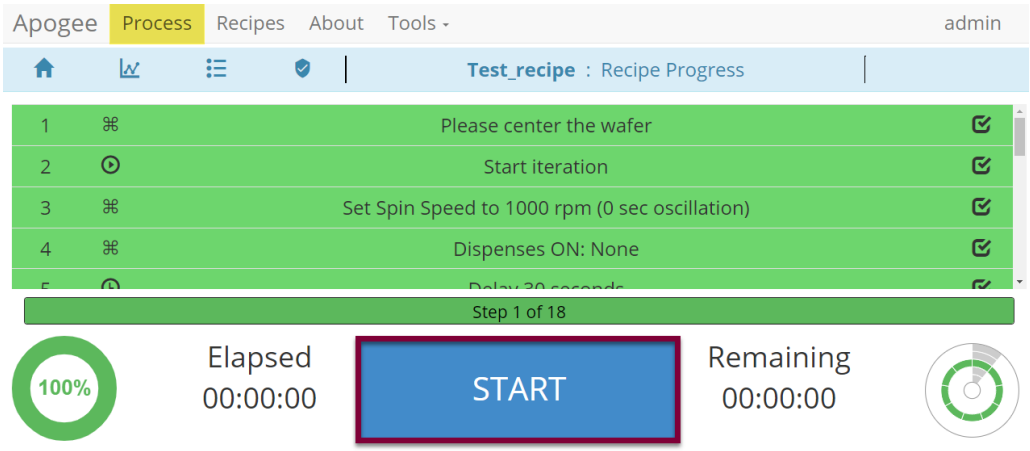

6. Use the centering activity to center the substrate.

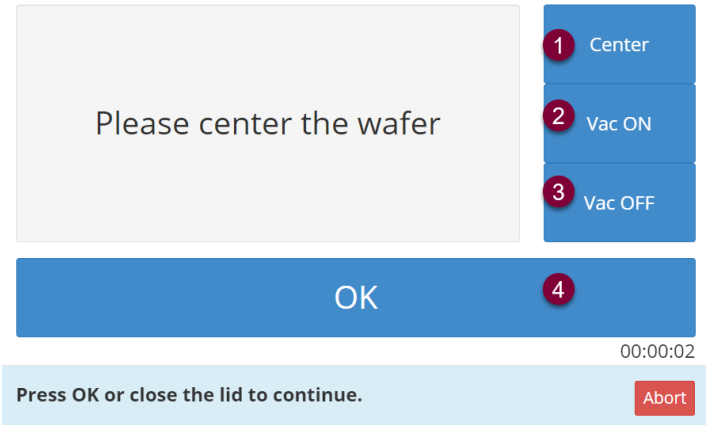

1. spin chuck rotates slowly with vacuum on then stops rotation & vents vacuum
2. toggle chuck vacuum on
3. toggle chuck vacuum off
4. resume recipe

7. Recipe execution.

*Users may be required to follow prompts on the screen during recipe execution.

4.4. Editing Recipes

Developer recipes may enlist an unlimited number of steps, each capable of defining spin speed, acceleration, spin time, percent exhaust opening, and dispense triggers. Users can easily insert new steps, reorder existing steps, and/or delete a selected step via the *Step Context Menu*.

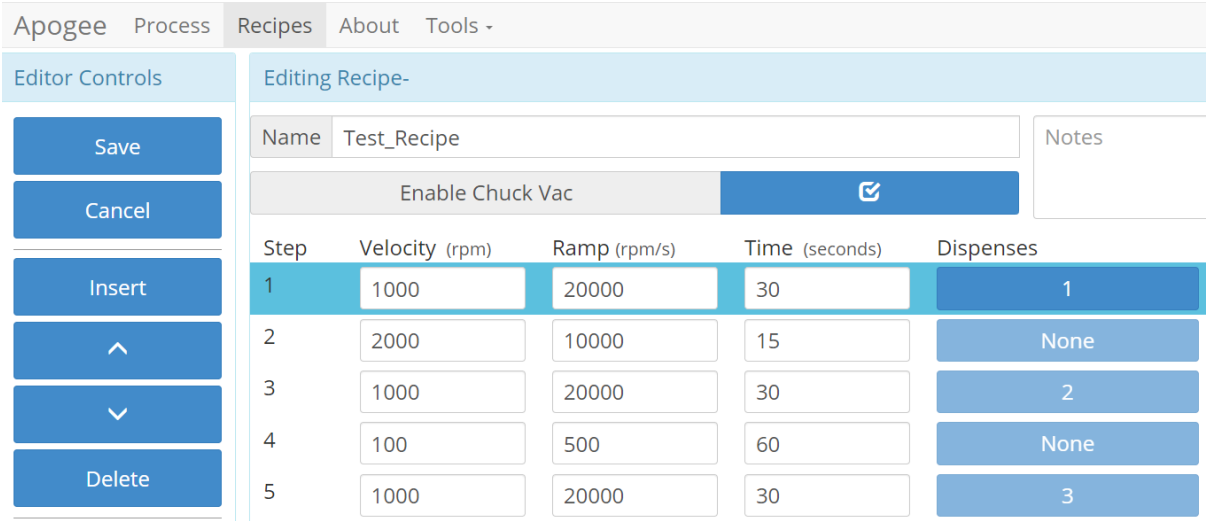

Name---------- recorded in log files and used as criteria when searching for recipes

Enable Chuck Vac[15]--------- used when the substrate requires vacuum to remain on the spin chuck; the user must center the substrate prior to spinning

Step Velocity[16]---------- speed in rpms the spin chuck will achieve on a given step

Step Ramp---------- rate in rpm/s the spin chuck will ramp on a given step

Step Time---------- the duration in seconds for a given step

Exhaust[17]---------- percent of exhaust opening

Dispense---------- the dispense triggered during a given step

4.5. Editing Dispense Selection

Enabled dispenses are rendered in green and display a checkmark. Multiple dispenses may be selected within the same step.

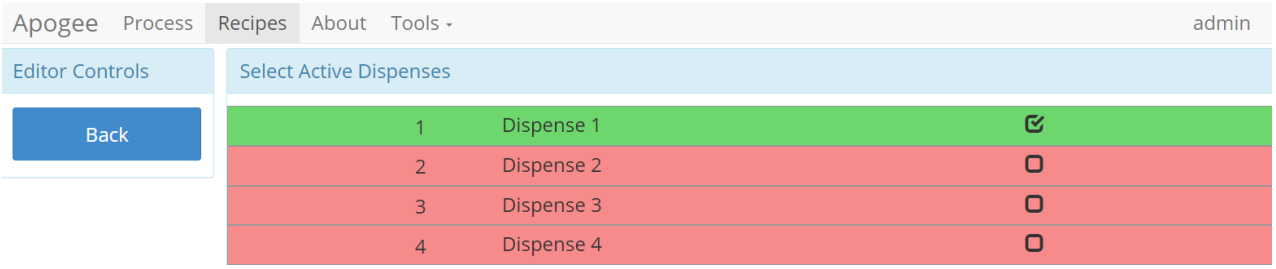

4.6. Tool Specific Settings - Apogee® Flange Spin Developer

Vac Threshold (kPa)---------- Minimum vacuum threshold that must be reached before spinning a substrate.

Centering Speed (rpm) ---------- How fast the substrate spins during a centering routine

[15] Only available to users with ARE permissions.
[16] preconditions default to ± 5% of the target speed
[17] field is only present on tools equipped with optional programmable exhaust

Centering Time (milliseconds) -------- How long the substrate spins during a centering routine

Idle Exhaust (%)[18] ---------- Default exhaust position when not running a process.

[18] Idle Exhaust does not apply to tools not equipped with Programmable Exhaust

5. Apogee® Flange Spin Developer Use & Operation

5.1. Spin Chuck Installation and/or Removal

1. In the center of the vacuum chuck, locate the spin chuck flat head cap screw.
2. Using a hex wrench, remove the chuck screw from the spindle.
3. Grasp the spin chuck and lift vertically for removal.
4. Align the new spin chuck slot with spin shaft pin and firmly press chuck onto shaft.
5. Use a hex wrench to tighten the chuck screw and secure the spin chuck to the shaft.

5.2. Starting Recipe

Developer recipes will vary based on materials being developed, thickness of the coating, and aspect ratios. Below is a basic starting recipe for the Apogee® Developer .

Below is an explanation of the steps of this recipe and how they can be optimized for each individuals substrate.

Step 1: This step dispenses developer across the substrate. This is done with the substrate spinning. This creates an agitation at the surface and will allow the developer to penetrate the coating. For most processes the spin speed ranges from 50-75 rpm. If the velocity is less than 50 rpm, material will wick around the backside of the substrate. The Time value should be set so that the substrate is flooded with material. Typically, 15 sec is more than enough but for larger substrates it may take more time.

Step 2: This step is to allow the developer to fully react with the material. Performing only Step 1 during a develop process will waste a lot of material. By dispensing material and then letting it soak, we allow the developer to react to its fullest potential.

Step 3: This step spins off the developer waste. The wafer does not have to be fully dry at this step but must not have a lot of liquid still on the wafer. If the wafer is not fully developed after this step, repeat step 1-3 for as many times as is necessary to fully develop the substrate. Many people must repeat this process 2 or 3 times for a total of 8-11 process steps.

Step 4: After the last spin off of developer waste, the wafer needs to be rinsed. This is typically done at a lower RPM than the spin off step but can be done at the same RPM as well. The time can be altered based on process needs. A larger substrate will generally take longer than a smaller substrate. This step can also include the back side rinse dispense if the option is available on the tool.

Step 5: This is the drying step. The velocity of the substrate is usually at least 1000 rpm for this step for 30 seconds to 1 minute. Typically, larger substrates will be spun at a lower velocity than smaller substrates. The velocity and time can be optimized for the process.

6. Developer Configurations

Development of features is a critical process step in photolithography. There are several processes to perform this step such as tank (bath) immersion and spin developing.

The use of immersion tank processes has steadily declined in MEMS fabrication and advanced lithography over the past decade due to excessive material consumption, non-uniform resolution, and poor clearing from high-aspect-ratio features. Additionally, increased throughput requirements and smaller features have further shifted mainstream applications to spin developing. As the popularity of spin developing has grown, three main methods have emerged.

6.1. Puddle/Stream Dispense

The most common and oldest process is the stream/puddle dispense. Developer is dispensed into a puddle at the center of the wafer. The wafer is then spun at low speed (0-50 rpm) long enough for the developer to cover the entirety of the wafer. The rotation is then stopped allowing the chemical reaction to dissolve the soluble areas of the patterned film. This process is very popular for thin films ≤ 1 µm thick and/or for small wafer applications. For thick films and/or high-aspect-ratio features, the stream puddle step may be repeated over several iterations to reapply fresh developer. However, this method is problematic for many of today's process requirements. Often features along the wafer perimeter are underdeveloped, and center features are over-developed due to the inherent over exposure of a puddle dispense.

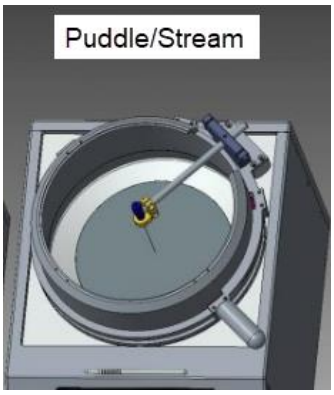

6.2. Side Spray Dispense

The use of side-angle spray nozzles (45º) significantly enhances fluid deposition uniformity. The standard configuration utilizes two side-spray nozzles to evenly apply developer solution across the substrate. These nozzles are positioned to spray from the center of the wafer out. The side spray nozzles are factory positioned outside the wafer plane and ensure uniform deposition for many substrate sizes. Cee® recommends the side spray dispense option for aspect ratios up to 5:1.

Over the years, the side spray dispense has become the most popular option as it allows for a variety of wafers sizes, materials, and feature sizes. Cee® Developers use side spray dispense as the standard setup configuration.

6.3. Direct Spray Dispense

Direct-angle nozzles (90º) are often used for continuous-spray applications and allow accelerated development of thick films (5-100 µm) with features having high aspect ratios greater than 5:1. The direct angle provides sufficient agitation to penetrate the film and remove soluble material.

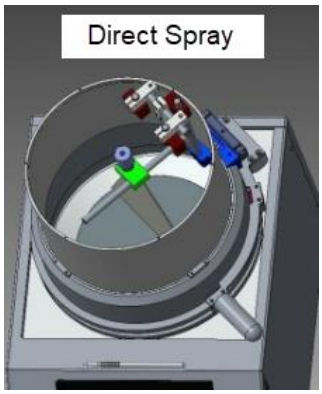

7. Preventative Maintenance

This maintenance manual provides personnel with procedures and guidelines for maintaining a Cee® Apogee® Flange Spin Developer. Below is a chart of recommend maintenance scheduling.

7.1. Service and Repairs

Safety Notice: Important Repair Information for Cee® Equipment

⚠ In order to maintain safety and performance standards, only authorized representatives of Cee® are permitted to conduct repairs or alterations on Cee® equipment.

⚠ When servicing the machine, use only replacement parts made or recommended by Cee®.

⚠ Unauthorized repairs may lead to serious risks such as equipment malfunction, damage, personal injury, or even death.

7.2. Fault Condition

In the event of a fault condition, power cycle the tool to restore function.

7.3. Safety Checks

Inspect developer lid for the following defects each day prior to use:

- loose assemblies
- improper closure
- improper bowl ring placement

7.4. Mechanical/Utilities Checklist

Evaluate	Frequency	Detail
Drains	Daily	Verify that there is a proper drain facility.
Exhaust	Daily	Verify that the exhaust is functioning at a range of 20-50cfm @ 0.2” water
Spin Chuck Cleanliness	Daily	A dirty spin chuck could cause vacuum errors. Wipe the spin chuck clean with isopropyl alcohol or acetone. For major buildup of material, a glass slide can be used to gently scrape the material away and then wipe clean. See the *Cleaning* section for more detailed instructions.
Spin Chuck Flatness	Quarterly	A non-uniform spin chuck can cause vacuum errors. Inspect visually against a straight edge. Small uniformity issues such as a burr can be gently removed with a glass slide. Larger deformations can be removed with fine sandpaper. Contact *Cee Customer Support* if the above methods are not successful.
Bearing Wear	Quarterly	Bad bearings can cause erratic spin speed and acceleration. When rotating the spindle shaft by hand, the shaft should spin easily with little noise. If the shaft does not spin easily or if a grinding noise is heard during a process, the bearing should be replaced.

Vacuum at Spindle	Quarterly	<33kPa abs - If low vacuum is present, check system supply. If supply is in spec and problems persist, contact Cee Customer Support for more information.
Axial Spindle Shaft Play	Bi-Annually	Axial play will cause excess bearing wear and possible vacuum error. There should be no axial play in the shaft.
Connections	Bi-Annually	Inspect all connections for proper installation.
Power	Bi-Annually	Verify that AC power is connected and of the proper voltage.

7.5. Cleaning

The Apogee® Flange Spin Developer should be cleaned following daily use. When cleaning the spin chuck, remove it from the equipment to keep solvent from getting into the developer vacuum system. It is good practice to use the mildest solvent possible such as acetone or isopropyl alcohol. ***Do not use caustic acids or bases.***

When cleaning the spin bowl, a small substrate should be on the spin chuck to keep solvent from getting into the vacuum system. Spin the wafer at approximately 100 RPM and use solvent in a wash bottle to flush out the spin bowl. Keep solvent from going down the spin shaft or the spin shaft tube. Shields and seals will protect the bearings from a small amount of solvent, but they will not tolerate large doses. Do not direct the solvent stream down the shaft or tube.

Use only water-based cleaner on the labels on the rear of the machine. Use only isopropyl or water-based cleaner on the *Power*, *Cee®* logo, *Caution ... Eye Protection*, and the *Cee® model/serial number* labels. The display may be cleaned with glass cleaner, water, or isopropyl alcohol.

8. Table of Revisions

Doc Rev #	Author	Description of Change(s)	Reviewed/Approved By	Date
1.1	J. Adams	- Added section 2.6 NRTL	B. Waterworth	2/13/2024